BLUE HYDRAULIC

THINK BLUE
BE FASTER

HP - Hydraulika Siłowa i Mechanika Maszyn
ul. Kalenicka 12, 70-790 Szczecin
hp@hp.szczecin.pl
605781011 605781007

www.hp.szczecin.pl

Blue Hydraulic

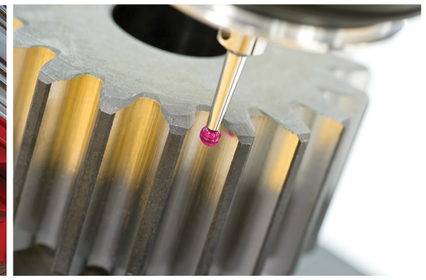

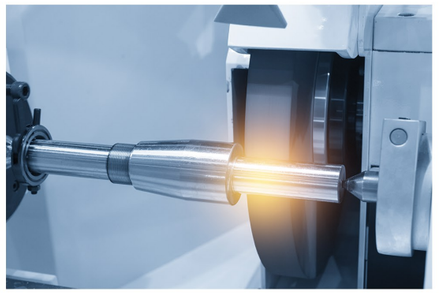

PUMP

BL -GP -BI -82 -4H -RP

- Oil Inlet / Outlet port
  - RP=Rear Port
  - SP=Side Port
  - RSP=Rear + Side Port
- Connection Type
  - 3H=3 Holes / UNI
  - 4H=4 Holes / ISO
- Rolation
  - BI=BI Rolation
  - L=Left, CCW
  - R=Right, CW
- Displacement in lpm
- Pump Type
  - GP=Gear Pump
  - APP=Axial Piston Pump
  - BAP=Bent Axis Pump
- Blue Hydraulic

CYLINDER

HD - 5 -196 - 6200 - FEM

- CylinderType
  - FEM=Front End Mounted
  - FCM=Front Cover Mounted
- Stroke (mm)
- First stage diameter (mm)
- Number of stage
- Cylinder Model
  - HD=Heavy Duty
  - MD=Mid-Duty
  - LMD=Light Midium Duty
  - LD=Light Duty

VALVE

BL -DCV -140 -TM

- Connection Type
  - TM=Tank Mounted
  - CM=Cylinder Mounted
- Working flow (lpm)
  - 140-200-250
- Directional Control Valve
- Blue Hydraulic

Important Note: *Rights of the drawings that existing in catalouge belongs to Blue Hydraulic; Drawings in the catalouge is not real aspect ratio; Please confirm technical information before ordering. All technical data can be changed without notice; Issued July 2019*

PRODUCT OVERVIEW

Cylinder

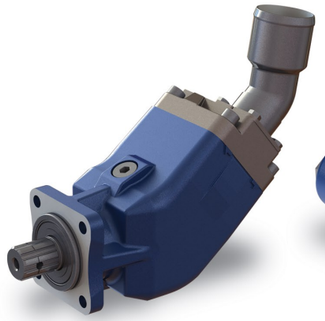
Bent axis piston pump

Gear pump

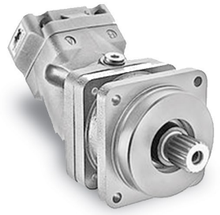
Piston motor

Oil tank

Valve

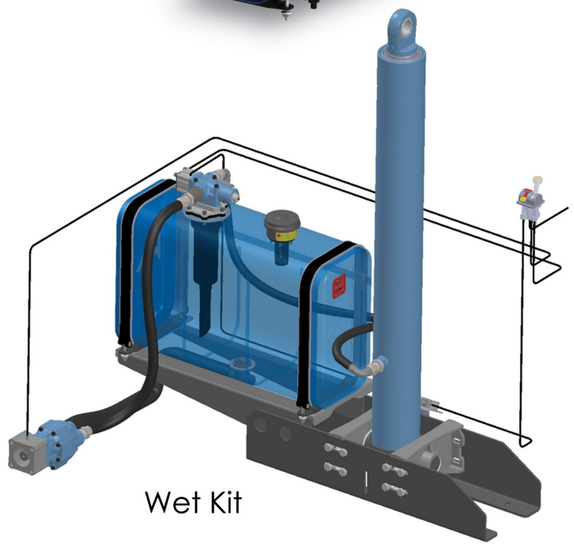
Wet Kit

Others

BENT AXIS PISTON PUMPS

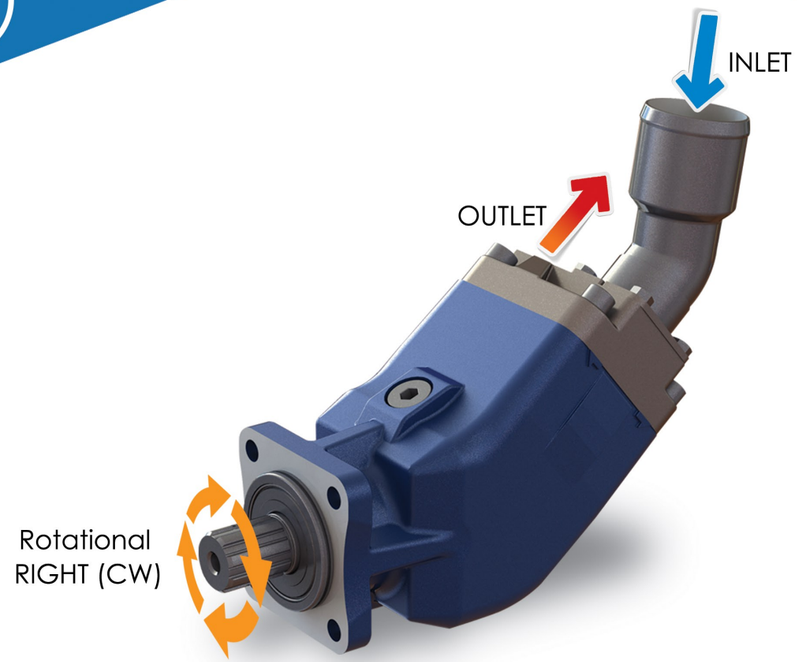

* High quality selected materials & produced by high precision
* Long working life and durability
* From 35 to 105 cc/rev and with maximum speed from 1700 to 2400 rpm
* Tested, reported : %100 each pump
* Designed for heavy duty

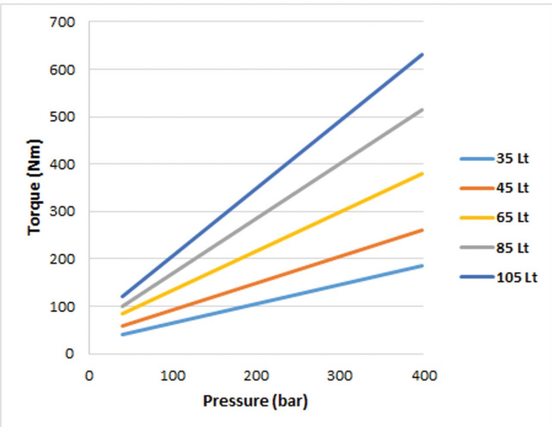

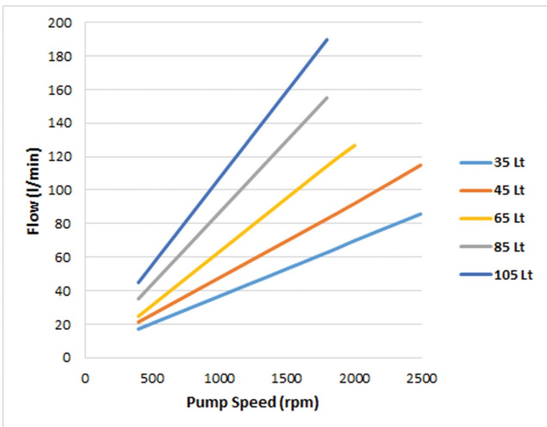

	BLBAP35L4H	BLBAP45L4H	BLBAP65L4H	BLBAP85L4H	BLBAP105L4H
Displacement (lpm)	35,4	45,3	63,2	85,1	105,7
Speed (rpm)					
Max. Continuous Speed	2400	2100	2000	1900	1700
Min. Intermittent Speed	300	300	300	300	300
Max. Intermittent Speed	3000	2500	2500	2400	2200
Pressure					
Max. Continuous	450	450	450	400	350
Max. Peak	500	500	500	500	400

	BLBAP35L4H	BLBAP45L4H	BLBAP65L4H	BLBAP85L4H	BLBAP105L4H
A	104	104	105	109,5	109,5
B	119	119	133	145,5	145,5
C	214	214	225	244	244
D	98	98	112	120,5	120,5
E	149	149	171	179	179
F	102	102	112	117	117
G	92,5	92,5	93	97	97

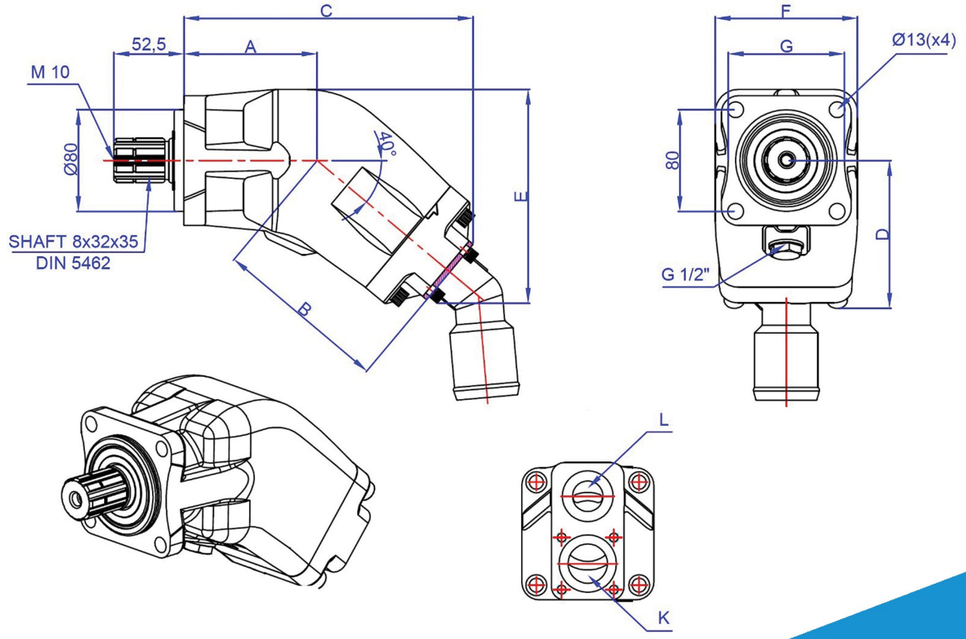

GEAR PUMPS

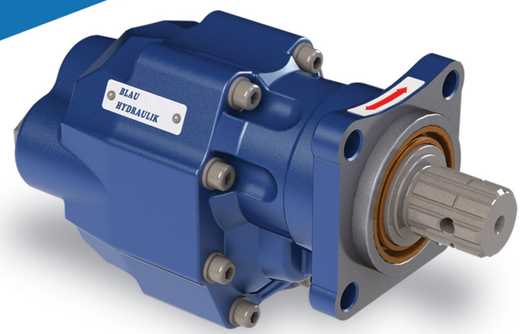

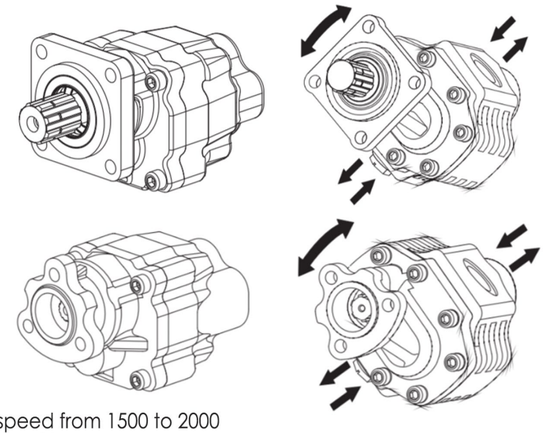

*Pumps with volume from 15 to 125 cc/rev and with max. speed from 1500 to 2000
*Test bench: %100 tested and reported with real working conditions
*Special sealing for high temperatures
*Recommended for all PTOs
*Two different sealing variants for different conditions (NBR & Viton)
*High precisoin GEAR standart

NEW! For the 3 types of gear pumps, there ara also ECO models that are compatible with single G type. (EKO 65, EKO 85 , EKO 105)

	BLGP 15BI4HRP	BLGP 25BI4HRP	BLGP 45BI4HRP	BLGP 65BI4HRP	BLGP 82BI4HRP	BLGP 105BI4HRP	BLGP 125BI4HRP
Displacement (lpm)	15,50	25,5	45,85	65,80	81,10	105,25	125,35
Speed (rpm)							
Max. Continuous Speed	2000	1900	1800	1800	1500	1500	1400
Min. Intermittent Speed	350	350	350	300	300	350	300
Max.Intermittent Speed	4150	4150	4150	3500	3000	3500	3000
Pressure (Bar)							
Max.Continuous	285	210	175	220	220	225	200
Max. Intermittent	315	240	195	240	230	240	210
Max. Peak	330	250	205	350	300	265	230

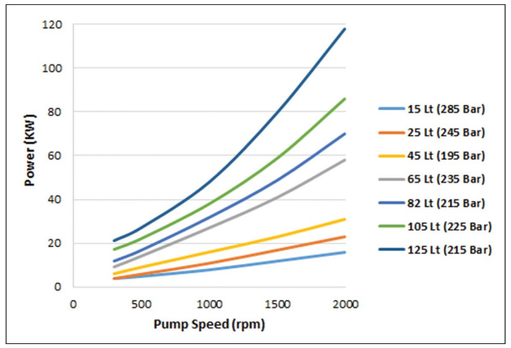

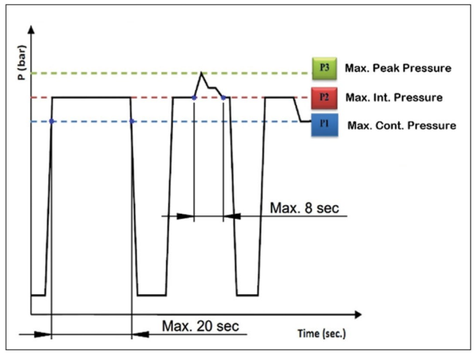

	BLGP 15BI4HRP		BLGP 25BI4HRP		BLGP 45BI4HRP		BLGP 65BI4HRP		BLGP 82BI4HRP		BLGP 105BI4HRP		BLGP 125BI4HRP	
	ISO	UNI	ISO	UNI	ISO	UNI	ISO	UNI	ISO	UNI	ISO	UNI	ISO	UNI
A	139	151	148	160	166	178	188,5	176,5	201	188	218	206	223	211
B							126,5	113,5	125	112				
C	134		134		134		143		143		169		169	
D	1085,5		1085,5		1085,5		113		113		139,5		139,5	
X	G 1/2"		G 3/4"		G 1"		G 1"		G 1"		G 1 1/4"		G 1 1/4"	
Y	G 1/2"		G 3/4"		G 1"		G 1"		G 1"		G 1 1/4"		G 1 1/4"	

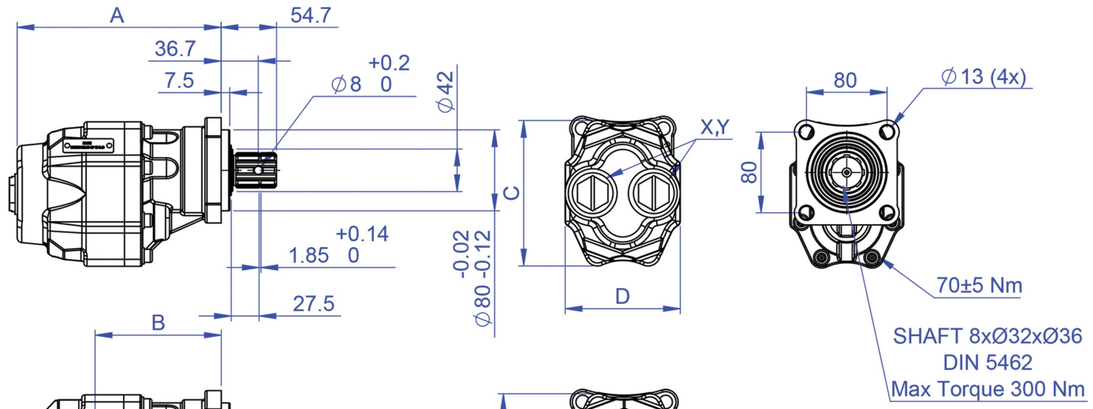

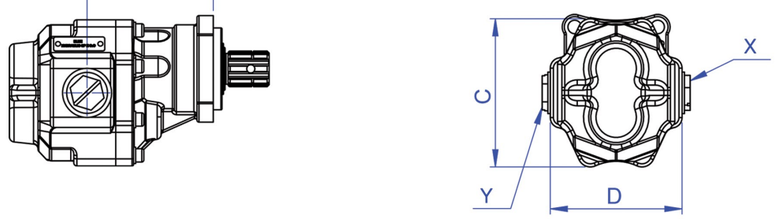

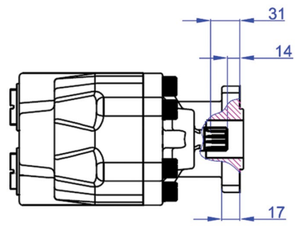

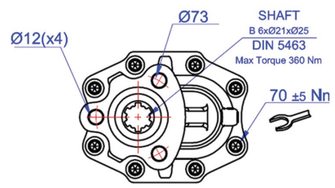

PISTON MOTOR

HPT/M-DIN MOTOR
Flange: ISO-7653 DIN
Shaft: DIN 5462 / ISO 14
High pressure operation
From 12 to 130 cc options
High speed operation
Nickel cover
Cont. work : 300 bar–4350 PSI
Peak work : 400 bar–5800 PSI

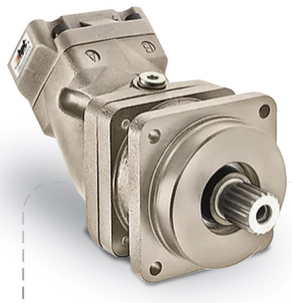

HPT/M-ISO MOTOR
ISO- flange mounted motor
ISO 4 hole from 80 to 160
All Key and Spline shaft options
From 10 cc to 130 cc options
High speed operation
Nickel cover
Cont. work : 300 bar – 4350 PSI
Peak work : 400 bar – 5800 PSI

HPT/M-CARTRIDGE MOTOR
Cartridgde flange mounted motor
Flange : M21-M22-M23 options
All Key and Spline shaft options
From 25 cc to 108 cc options
High speed operation
Nickel cover
Cont. work : 300 bar – 4350 PSI
Peak work : 400 bar – 5800 PSI

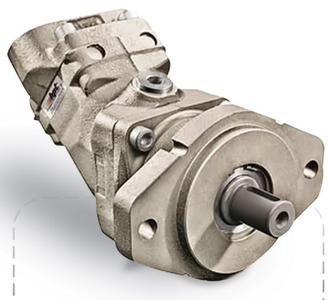

HPT/M-SAE B
SAE B mounted motor
Flange: SAE B 2 and 4 holes
All Key and Spline shaft options
From 10 cc to 34 cc options
High speed operation
Nickel cover
Cont. work : 300 bar–4350 PSI
Peak work : 400 bar – 5800 PSI

HPT/M-SAE C
SAE C mounted motor
Flange: SAE C 4 holes
All Key and Spline shaft options
From 25 cc to 108 cc options
High speed operation
Nickel cover
Cont. work : 300 bar – 4350 PSI
Peak work : 400 bar – 5800 PSI

HPT/M-SAE D
SAE D mounted motor
Flange: SAE D 4 holes
All Key and Spline shaft options
From 84 cc to 130 cc options
High speed operation
Nickel cover
Cont. work : 300 bar – 4350 PSI
Peak work : 400 bar – 5800 PSI

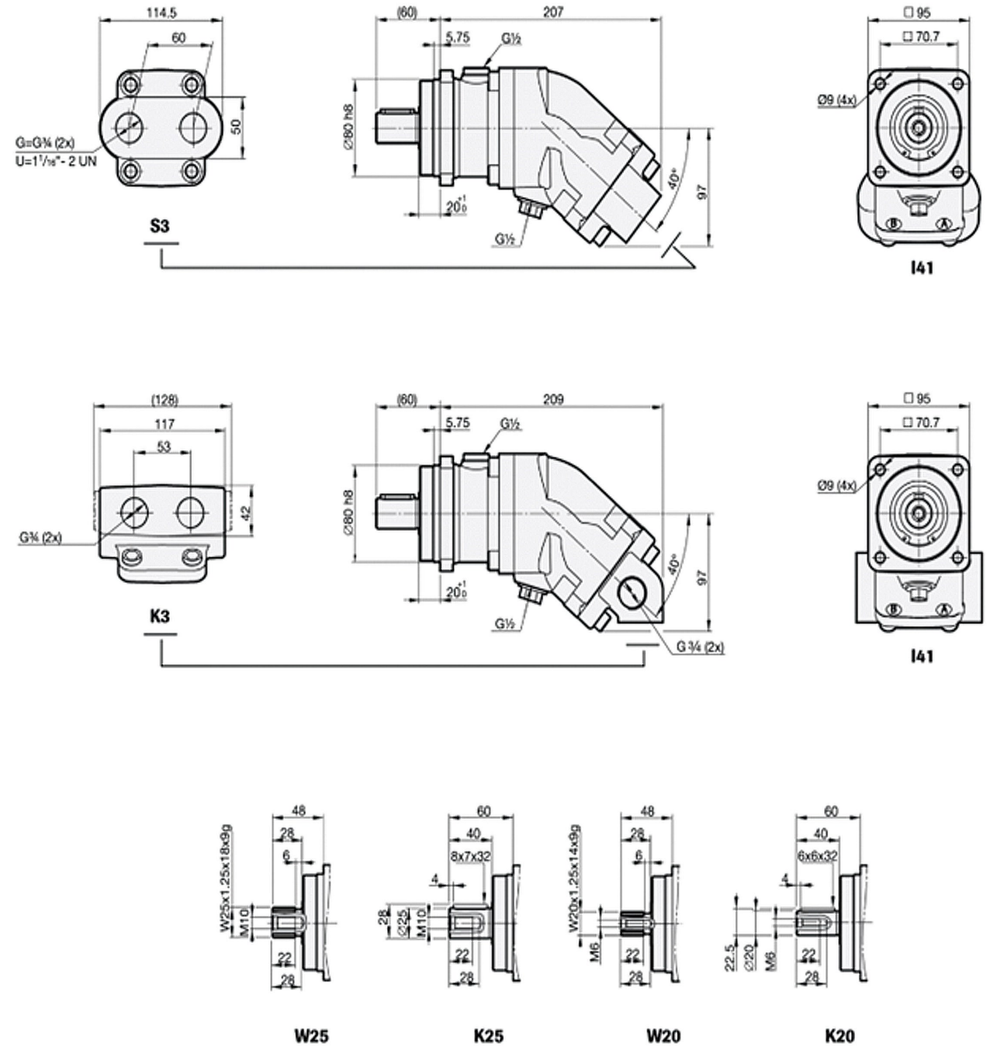

This is an example drawing of our constant hydraulic motors.
For further application purposes , connection types, technical data and information we are at your disposal.

WET KIT

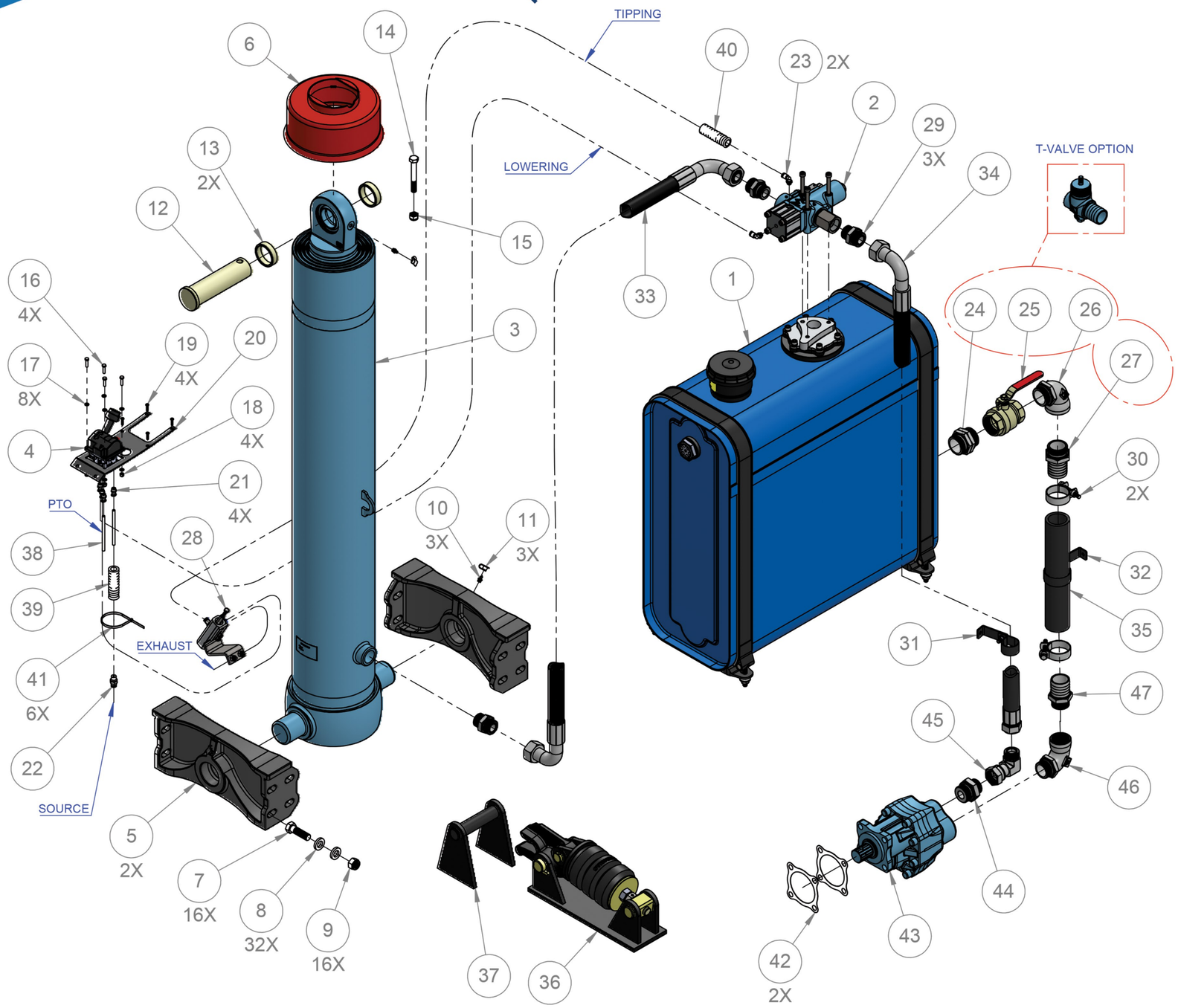

ITEM NO.	DESCRIPTION	QTY.
1	OIL TANK ON CHASSIS	1
2	DIRECTIONAL CONTROL VALVE	1
3	TIPPING CYLINDER	1
4	AIR CONTROL VALVE (JOYSTICK)	1
5	CHASSIS BRACKET	2
6	DUST COVER	1
7	HEXAGON BOLT	15
8	WASHER	32
9	NYLON INSERT LOCK NUT	16
10	GREASE FITTING	3
11	GREASE FITTING COVER	3
12	COLLER PIN	1
13	CYLINDER EYE SPACER	2
14	HEXAGON BOLT	1
15	NYLON INSERT LOCK NUT	1
16	HEXAGON BOLT	4
17	SPRING WASHER	8
18	NYLON INSERT LOCK NUT	4
19	STEEL METAL SCREW	4
20	ACV BRACKET	1
21	AIR COUPLING	4
22	AIR CONNECTOR	1
23	AIR COUPLING	2
24	ADAPTER LOCK NUT	1
25	BALL VALVE	1
26	FITTING INLT.KIT	1
27	FITTING INLET ELASTIC SEAL RING	1
28	LIMITATION CNTRL VALVE PNEU.KIT	1
29	ADAPTER	3
30	HOSE CLAMP	2
31	HOSE ROUTING CLAMP KIT	1
32	HOSE ROUTING CLAMP KIT	1
33	HP.HOSE	1
34	HP.HOSE	1
35	SUCTION HOSE	1
36	BODY FIX (TIPPER FIXING MECHANISM)	1
37	BODY FIX LOCKING PLATE KIT	1
38	AIR TUBE	1
39	PVC FLEXIBLE TUBE	1
40	PVC FLEXIBLE TUBE	1
41	NYLON CABLE TIE	6
42	PAPER SEAL	2
43	GEAR PUMP BI-ROTATIONAL	1
44	ADAPTER	1
45	ADAPTER	1
46	FITTING INLT.KIT	1
47	HOSE PILLAR	1

FRONT COVER MOUNTED (FCM)

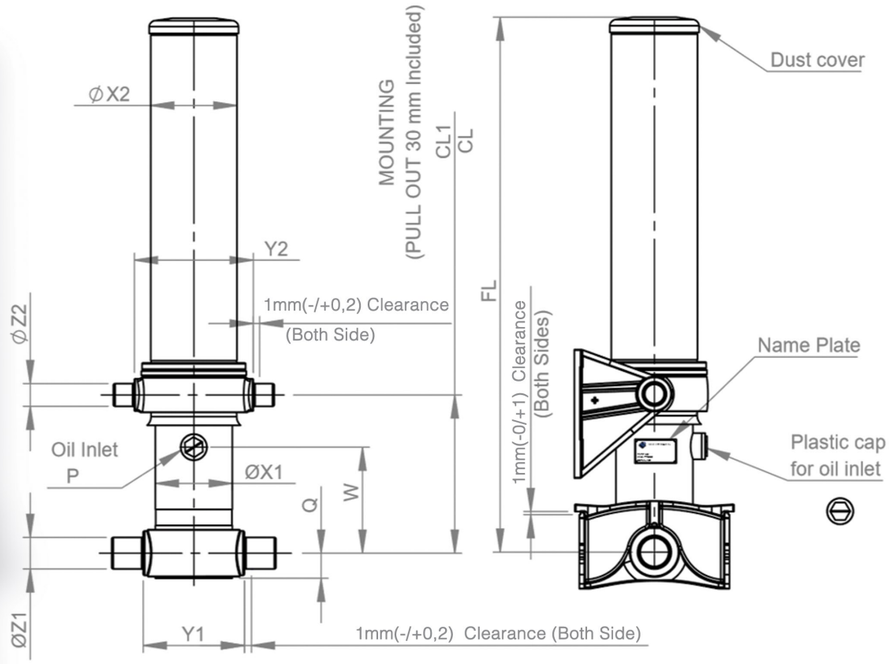

	Cylinder Model	Dimensions (mm)											Stroke (mm)
		X1	X2	Y1	Z2	Z1	Y2	W	CL	FL	P	Q	
1	LD-3-115-3200-FCM	135	168	170	44	60	216	190	313	1358	3/4"	55	3200
2	LMD-3-134-3720-FCM	156	219	193	65	60	283	190	313	1585	3/4"	55	3720
3	LMD-4-134-4960-FCM	156	219	193	65	60	283	190	313	1583	3/4"	55	4960
4	MD-3-154-3990-FCM	175	219	215	65	60	283	190	313	1690	1"	55	3990
5	MD-4-154-4520-FCM	175	219	215	65	60	283	190	313	1458	1"	55	4520
6	MD-4-174-4600-FCM	196	242	240	65	60	340	190	313	1460	1"	65	4600
7	MD-5-174-6230-FCM	196	242	240	65	60	340	190	313	1586	1"	65	6230
8	MD-5-174-7135-FCM	196	242	240	65	60	340	190	313	1786	1"	65	7135
9	MD-5-174-8200-FCM	196	242	240	65	60	340	190	313	2026	1"	65	8200
10	HD-5-196-6425-FCM	219	273	265	65	65	355	190	313	1486	1"	65	6425

Effective Diameter (mm)	196	174	154	134	115	97	79	63
Thrust At 190 Bar	57,3	45,2	35,4	26,8	19,7	14,0	9,3	5,9

Specifications

Operating Pressure: 190 bar
Max. Operating Pressure: 205 Bar

Each cylinder is individually tested under real working conditions.

All stages are hard chromed (25 ±5 Mikron)

All cylinder materials consist of st-52 cold drawn tubes

Standard cylinder is painted RAL 9005.

The paint resists up to 400 hours with salt spray test (ASTM B-117)

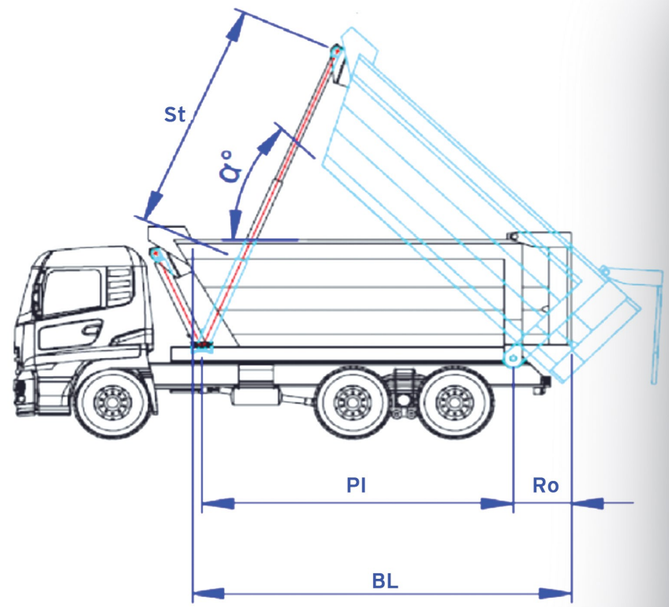

$$\alpha° = \frac{St \times 60}{Pl}$$

FORMULATION

St : Stroke mm
BL : Body Length mm
Ro : Rear Overhang mm
Pl : Pivot Length mm
α° : Tipping Angle

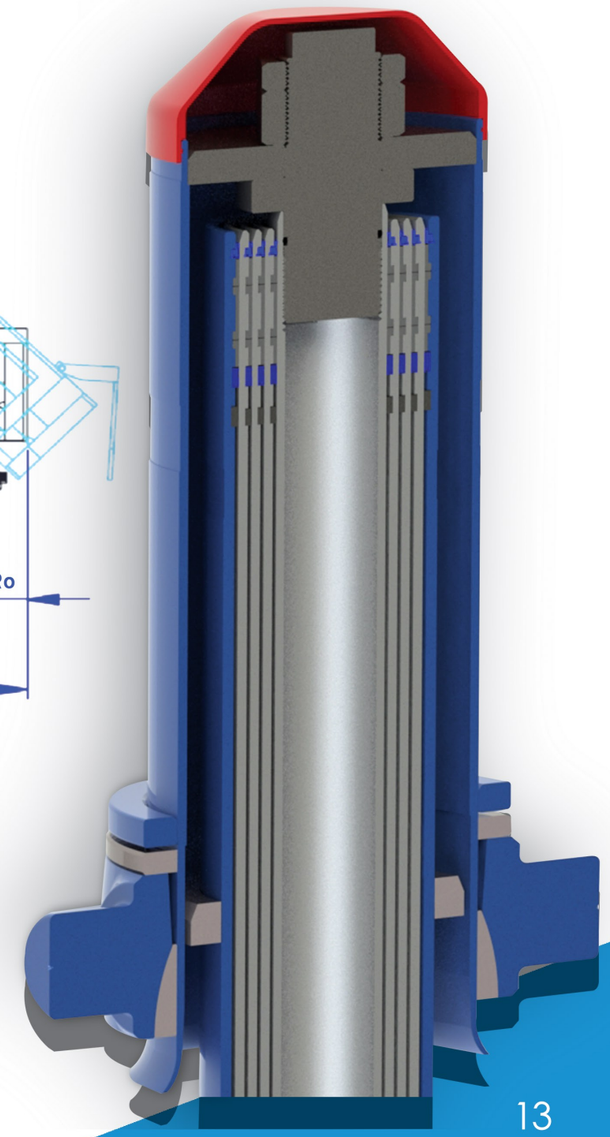

FRONT END MOUNTED CYLINDER (FEM)

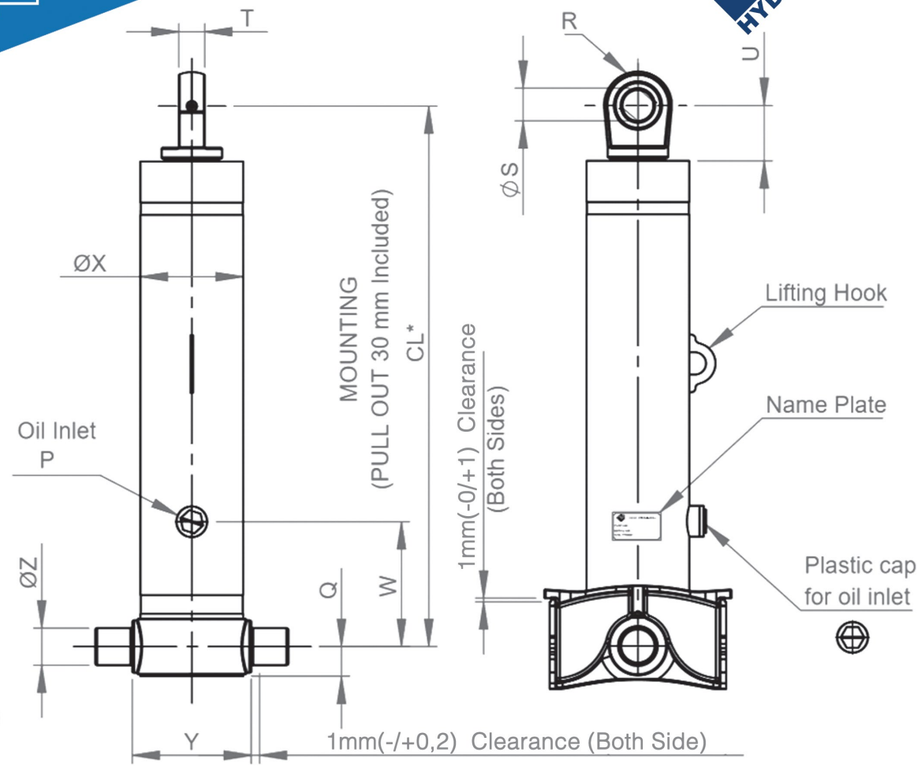

	Cylinder Model	Dimensions (mm)											Stroke (mm)
		X	Z	Y	W	U	CL	T	P	S	Q	R	
1	LD-3-115-2910-FEM	135	60	170	200	95	1269	43	3/4"	50	55	52,5	2910
2	LMD-3-134-3645-FEM	156	60	193	200	95	1553	43	3/4"	50	55	52,5	3645
3	LMD-3-134-3720-FEM	156	60	193	200	95	1582	43	3/4"	50	55	52,5	3720
4	MD-3-154-3853-FEM	175	60	215	200	95	1630	43	1"	50	55	52,5	3853
5	MD-4-154-4520-FEM	175	60	215	200	95	1455	43	1"	50	55	52,5	4520
6	MD-4-154-4940-FEM	196	60	215	200	95	1508	43	1"	50	55	52,5	4940
7	MD-4-174-4600-FEM	196	60	215	200	95	1480	43	1"	50	65	52,5	4600
8	MD-5-174-5400-FEM	196	60	215	200	95	1357	43	1"	50	65	52,5	5400
9	MD-5-174-6200-FEM	196	60	215	200	95	1548	43	1"	50	65	52,5	6200
10	HD-6-196-6642-FEM	219	60	265	200	95	1575	43	1"	50	65	52,5	6642
11	HD-5-196-7775-FEM	219	60	265	200	95	1925	43	1"	50	65	52,5	7775

Effective Diameter (mm)	196	174	154	134	115	97	79	63
Thrust At 190 Bar	57,3	45,2	35,4	26,8	19,7	14,0	9,3	5,9

UNDERBODY CYLINDER

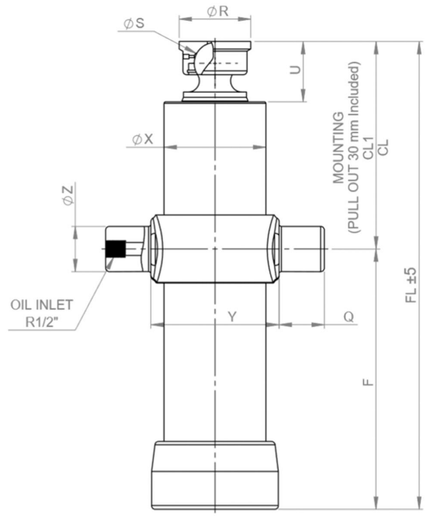

		Dimensions (mm)											
	Cylinder Model	X	Z	Y	Z	Q	CL	CL1	R	S	F	FL	Stroke (mm)
1	LD-4-115-1350-UBS	134	40	155	40	85	172	202	95	55	370	542	1350
2	LD-4-115-1720-UBS	134	40	155	40	85	172	202	95	55	463	635	1720
3	LMD-4-134-1720-UBS	154	45	175	45	96	160	190	118	60	486	646	1720
4	MD-7-154-1624-UBS	175	50	210	50	76	216	246	118	45	211	427	1624
5	MD-5-154-1875-UBS	175	50	210	50	96	172	202	118	60	419	591	1875
6	MD-5-174-2550-UBS	196	60	240	60	110	172	202	118	65	600	770	2550
7	HD-6-196-3060-UBS	219	65	265	60	110	175	205	118	65	600	770	3060

Specifications

Operating Pressure: 190 bar

Max. Operating Pressure: 205 bar

Each cylinder is individually tested under real working conditions.

All stages are hard chromed (25 ±5 Mikron)

All cylinder materials consist of st-52 cold drawn tubes

Standard cylinder is painted RAL 9005.

The paint resists up to 400 hours with salt spray test (ASTM B-117)

OIL TANKS

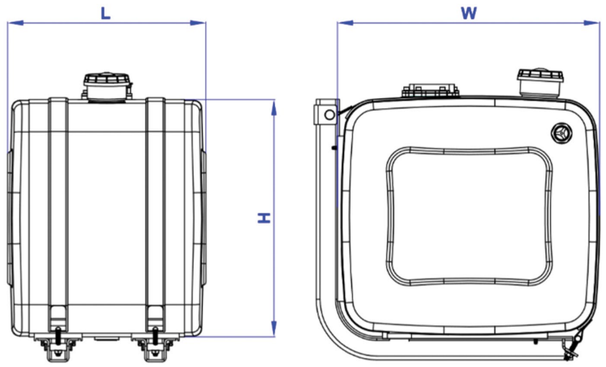

Hydraulic Oil Tanks
Aluminium or Stainless Steel
Volume from 75 to 220 Liters
For Side Mounted
Including Ventilation Filter and Stopcock

HxW (mm)	420 X 520		560 X 640		620 X 670				690 X 690	
L (mm)	400	600	400	600	300	400	500	600	400	500
V (lt)	75	110	120	190	110	150	180	220	160	200

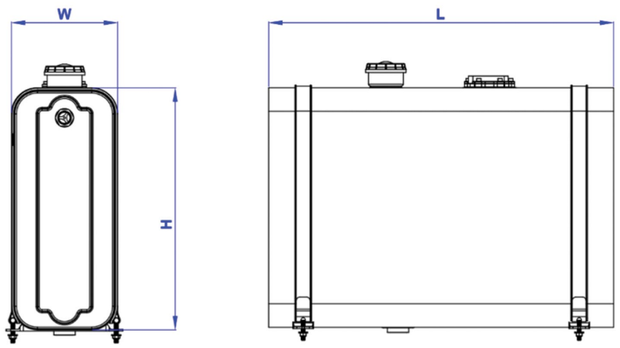

Hydraulic Oil Tanks
Aluminium or Stainless Steel
Volume from 75 to 220 Liters
For Rear Mounted
Including Ventilation Filter and Stop-cock

HxW (mm)	410 X 310		510 X 310					700 X 250		650 X 320		520 X 420	
L (mm)	600	1150	680	850	1000	1100	1250	700	850	650	900	890	1100
V (lt)	65	125	90	110	135	150	180	95	120	120	170	160	200

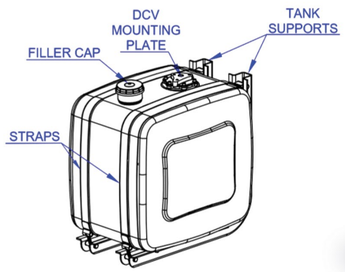

EQUIPMENTS

HYDRAULIC QUICK COUPLING
Working temperature: -20 ° C / +100 ° C
Exchange: ISO 7241 -1 A
Operating pressure: up to 350 bar
Available sizes: 1/4 " to 2"
Seal description: Nitrile NBR
Flow rate: up to 753 l / min
Material: Carbon steel with high strength

CHECK VALVES
Working temperature: -20 ° C / +100 °
Operating pressure: up to 350 bar
Available threads: BSP - NPT
Available sizes: from 3/8 " to 1/2"
Seal description: Nitrile NBR
Flow rate: up to 50 l / min
Material: Carbon steel

PRESSURE RELIEF VALVES
Working temperature: -30 ° C / +110 ° C
Operating pressure: up to 410 bar
Available threads: BSP - NPT
Available sizes: from ½"
Seal description: Nitrile NBR
Material: Aluminium

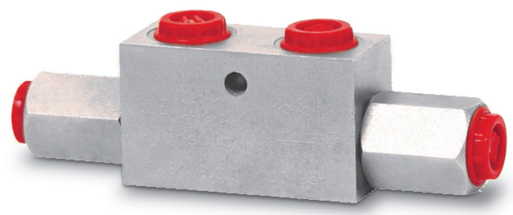

TWIN LOCK VALVES
Working temperature: -30 ° C / +110 ° C
Operating pressure: up to 380 bar
Available threads: BSP - NPT
Available sizes: from 1/4 " to 1/2"
Seal description: Nitrile NBR
Material: Aluminum / Carbon Steel

DIRECTIONAL CONTROL VALVE

Cylinder Mounted 140L DCV

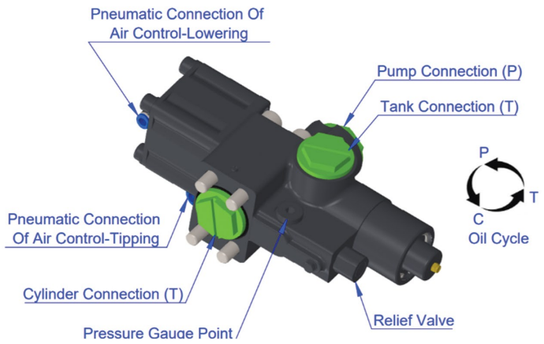

Tank Mounted 140L DCV

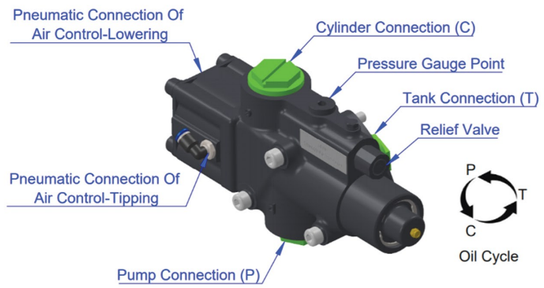

SPECIFICATIONS

Displacement: 140 Liter
Operating pressure: 170 bar
Max. continuous pressure: 190 bar
Top pressure: 250 bar
Filtration: ISO 18/13

CABIN CONTROL VALVE

The valve performance and leak are tested at 10 bar.
The outlet connection is equipped with a brass silencer M5.
The air connections are equipped with straight connections of 1/8' BSP x 6mm

Display of operating directions (up and down) on the rotary knob
Automatic switch off of the PTO shaft when lowering

POWER PACK

Modell	Betriebs-spannung	Antriebs-leistungen	Zahnrad-pumpen	Behälter
BL-HA12-1	12V	1,5 KW	2,5cc	10L
BL-HA12-2	12V	1,5 KW	3,15cc	20L
BL-HA24-1	24V	2 KW	3,65cc	20L
BL-HA24-2	24V	2 KW	4,2cc	20L
BL-HA24-3	24V	3 KW	3,15cc	12L
BL-HA24-4	24V	3KW	3,65cc	20L

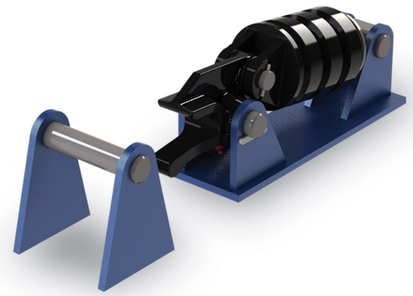

BODY FIX

The system creates a strong connection between the tipper body and the chassis
It avoids unnecessary wear of the kippers while driving
it reduces the noise pollution

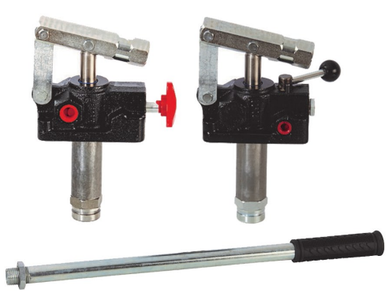

HAND PUMP

Single acting
Double acting
Air flow: 25 and 45 cm³

PNEUMATIC KNOCK-OFF VALVE

Air intake: G ¼"
Air outlet: G ¼"
Maximum Operating pressure: 10 bar
Operating temperature: -40°, +140°C